Spesifikasi Produk
Product Datasheet

LA22C-11
Push Button 22 mm - LA22C Series

Gambar Produk
Product Picture

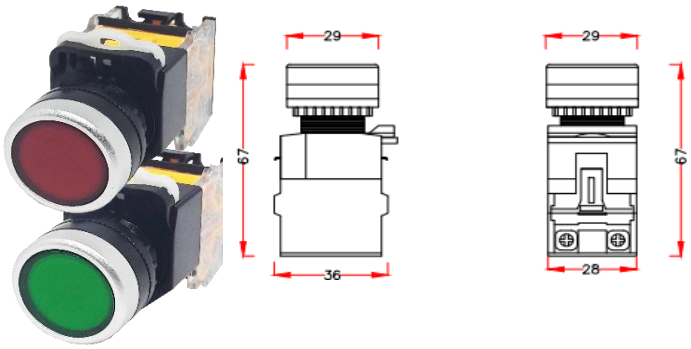

Karakteristik Produk
Product Characteristics

Kategori Produk Product Category	Command Switch
Nama Produk Product Name	LA22C-11
Ukuran Instalasi (mm) Installation Size (mm)	22 mm
Fungsi Function	Push Button
Kontak Contact	1NO + 1NC
Indikator LED LED Indicator	Tanpa LED Without LED
Tipe Operasional Operational Type	Spring Return
Ketahanan Mekanis Mechanical Life	> 3 x100000 time
Suhu Operasional Ambient Temperature	-25°C~ 55°C
Bahan Material	Plastik Plastic
Warna Tombol Button Colour	Merah/Hijau Red/Green
Proteksi Protection Degree	IP40 - 65
Standar Standard	IEC947-5-1
Berat Bersih Net Weight	51 g

Kemasan
Packing

Jenis Unit Kemasan 1 Unit Type in Package 1	Box Box
Jumlah Unit Kemasan 1 Unit Quantity in Package 1	10 10
Berat Kemasan 1 Package 1 Weight	510 g 510 g
Tinggi Kemasan 1 Package 1 Height	85 mm 85 mm
Lebar Kemasan 1 Package 1 Width	150 mm 150 mm
Panjang Kemasan 1 Package 1 Length	85 mm 85 mm